HOME SOURCE®

ASSEMBLY INSTRUCTION
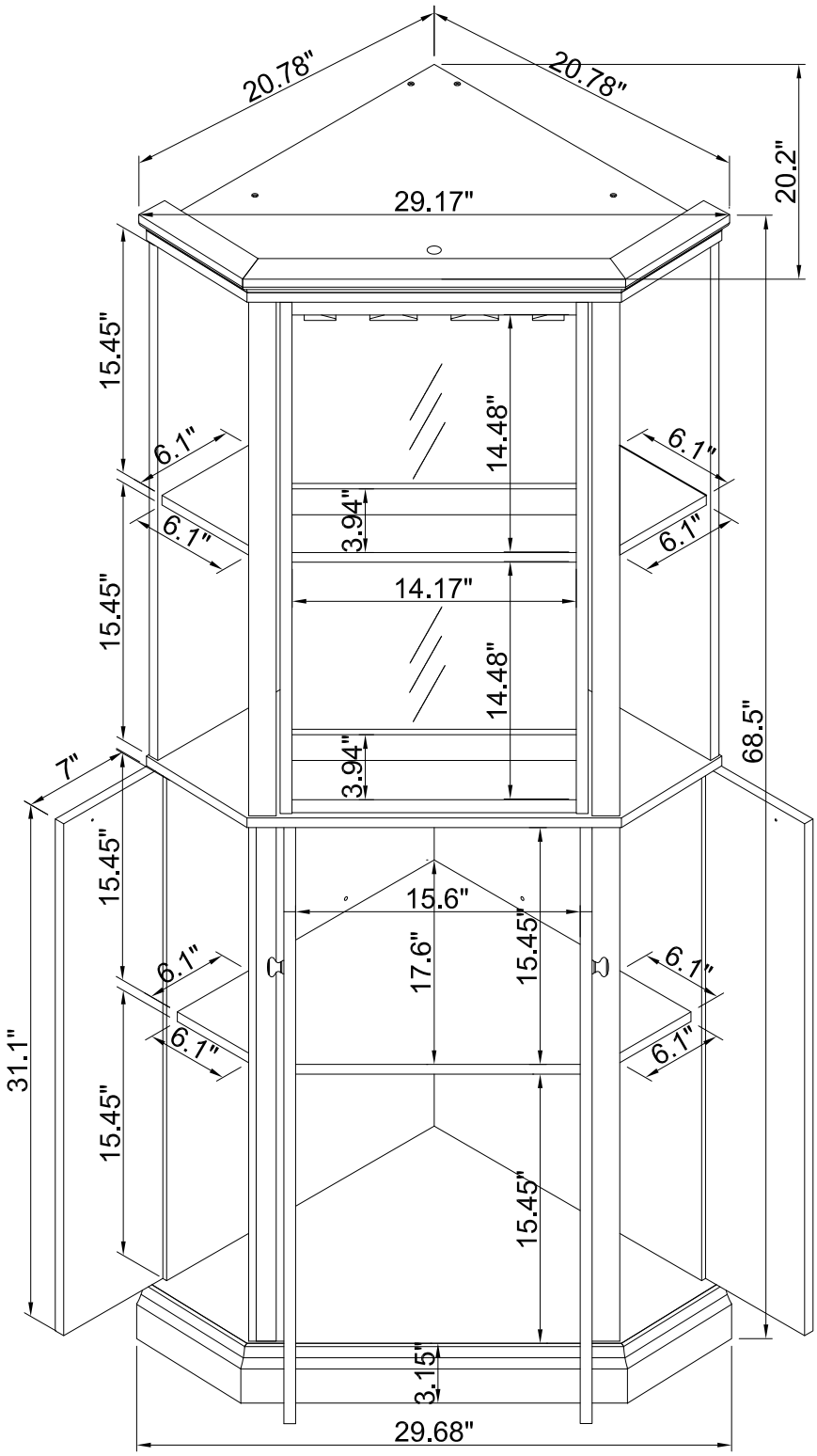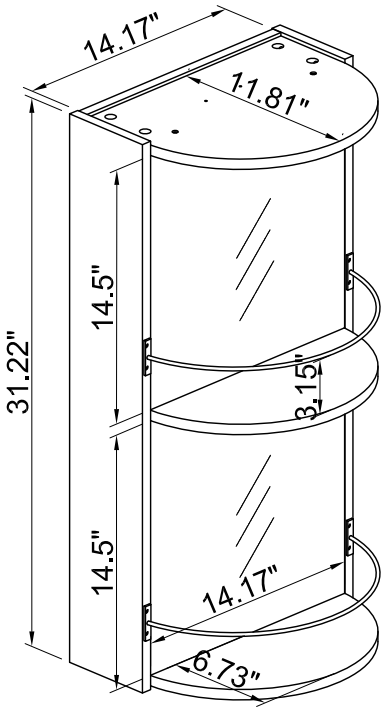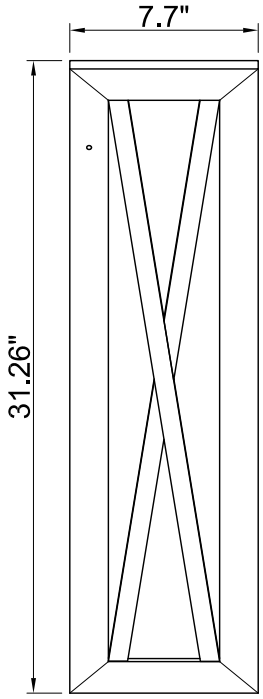
MODEL:JZ88 MOP