Items:JZ28

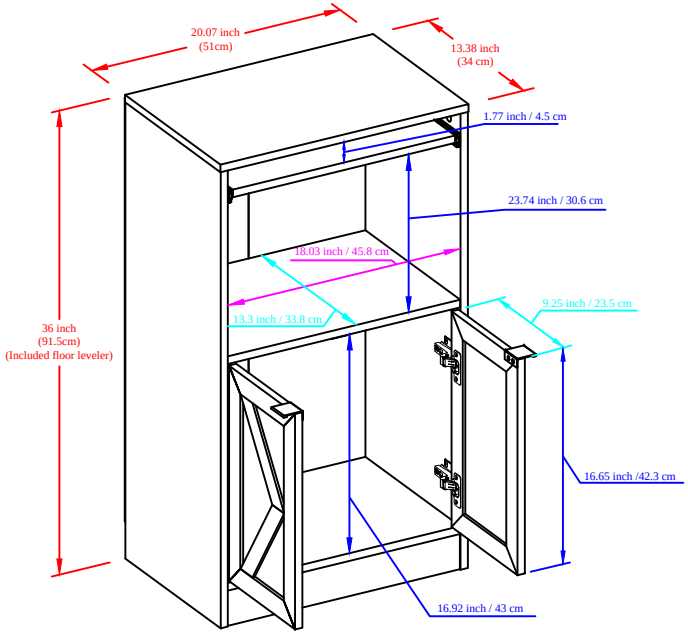
20.07 inch
(51cm)
13.38 inch
(34 cm)
1.77 inch / 4.5 cm
23.74 inch / 30.6 cm
18.03 inch / 45.8 cm
13.3 inch / 33.8 cm
9.25 inch / 23.5 cm
36 inch
(91.5cm)
(Included floor leveler)
16.65 inch /42.3 cm
16.92 inch / 43 cm

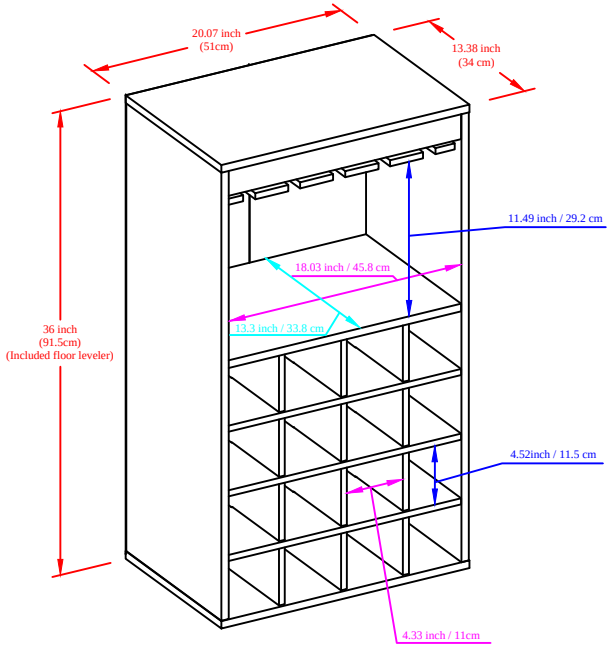
20.07 inch
(51cm)
13.38 inch
(34 cm)
11.49 inch / 29.2 cm
18.03 inch / 45.8 cm
13.3 inch / 33.8 cm
36 inch
(91.5cm)
(Included floor leveler)
4.52inch / 11.5 cm
4.33 inch / 11cm

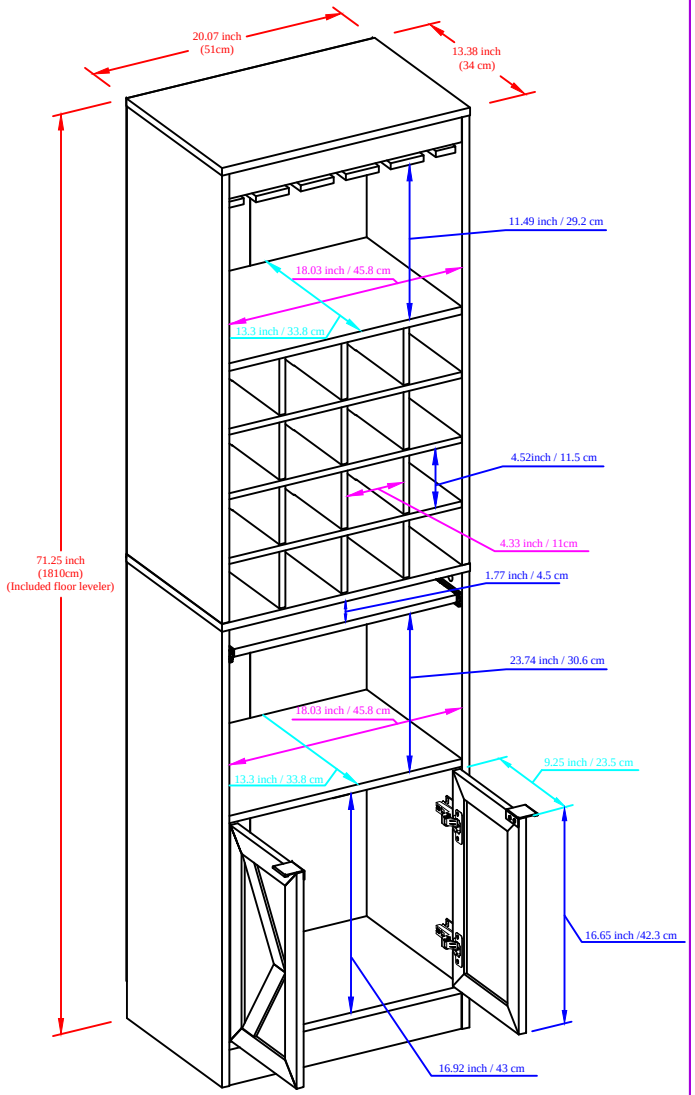
20.07 inch
(51cm)
13.38 inch
(34 cm)
11.49 inch / 29.2 cm
18.03 inch / 45.8 cm
13.3 inch / 33.8 cm
4.52inch / 11.5 cm
4.33 inch / 11cm
71.25 inch
(1810cm)
(Included floor leveler)
1.77 inch / 4.5 cm
23.74 inch / 30.6 cm
18.03 inch / 45.8 cm
13.3 inch / 33.8 cm
9.25 inch / 23.5 cm
16.65 inch /42.3 cm
16.92 inch / 43 cm