HOME SOURCE
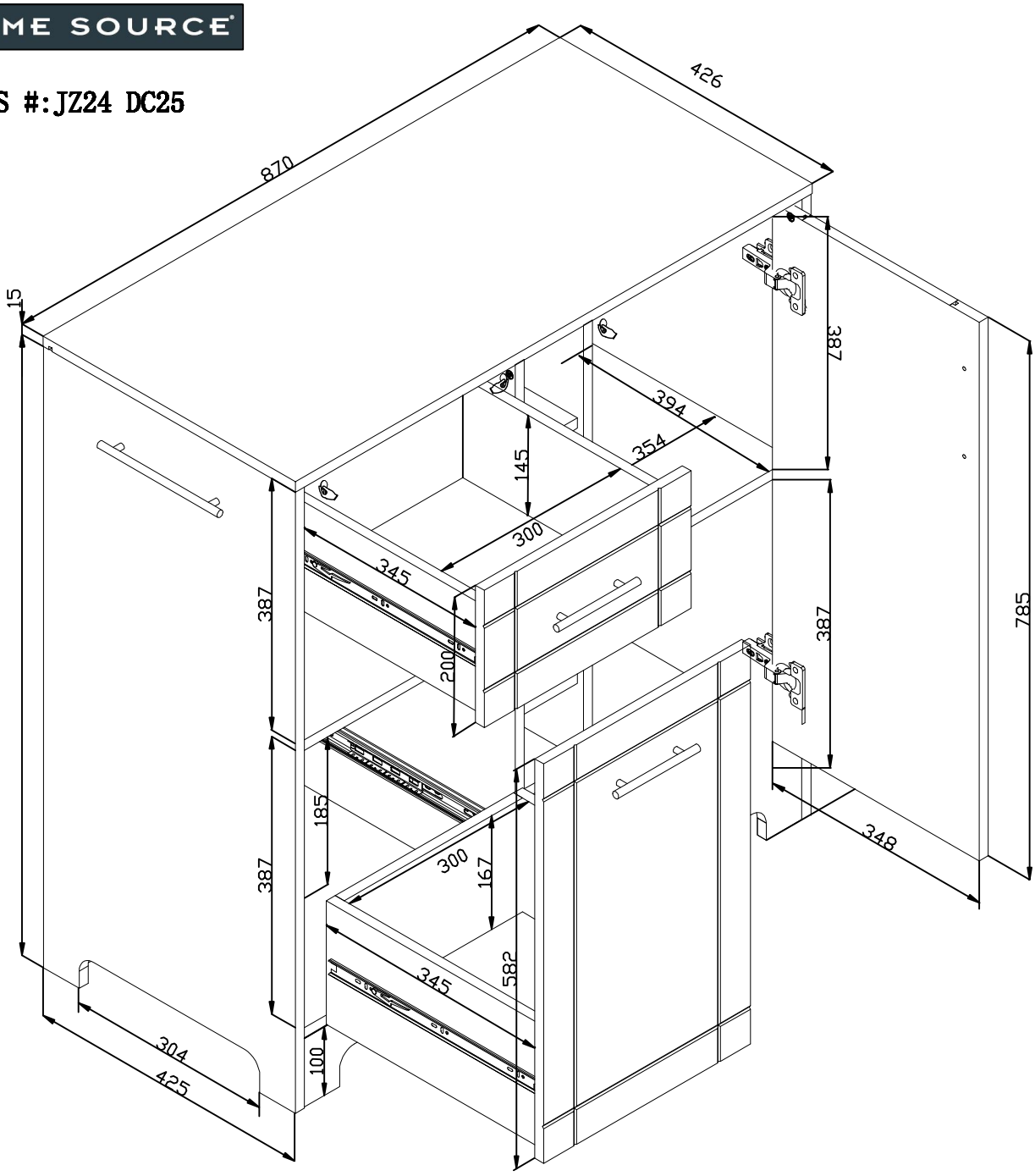
ITEMS #:JZ24 DC25